ECCO SPECIAL GAS VENT

ECCO™ Manufacturing

ECCO™ is proud to be a member of:

SMACNA
Sheet Metal and Air Conditioning Contractors' National Association
www.smacna.org

HRAI
Heating, Refrigeration and Air Conditioning Institute of Canada
www.hrai.ca

HARDI
Heating, Air-conditioning & Refrigeration Distributors International
www.hardinet.org

ADI
Air Distribution Institute
www.steelduct.org

AD
Affiliated Distributors™
www.adhq.com

CME
Canadian Manufacturers & Exporters
www.cme-mec.ca

SPIDA
Spiral Duct Manufacturers Association
www.spida.org

REV. W-4a

INDEX

ADAPTERS
- PVC START — APS B4-7
- UNIVERSAL — AOS B4-6

BANDS
- LIGHT SUPPORT — LSB B4-7
- LOCKING — LB B4-6

CONE FLASHINGS
- FLAT — FF B4-8
- VARIABLE PITCHED — PF B4-9

DRAIN TUBE KITS — DK B4-6

ELBOWS
- 45° — E45 ..... B4-5
- 87° — E87 ..... B4-4

FIRESTOP SPACERS — FS B4-7

HIGH STRENGTH CLAMPS — C B4-6

INTRODUCTION B4-3

OPEN TERMINATIONS WITH SCREEN — OT B4-7

PIPE LENGTHS
- CUT — LC B4-4
- FIXED — L B4-4

RAIN CAPS
- HIGH WIND — RCCS B4-8

ROOF JACKS
- FLAT CONE — FRJ B4-9
- VARIABLE PITCH — PRJ B4-9

STORM COLLARS — SC B4-8

TAPERED ECCENTRIC INCREASERS — EI B4-5

TAPERED ECCENTRIC REDUCERS — ER B4-5

TERMINATION ELBOWS WITH SCREEN — ET B4-8

UNIVERSAL DRAIN LENGTHS — LU B4-5

WALL THIMBLES — WT B4-7

– E.&O.E. – Subject to Change Without Notice – May Not Be Available At All Locations –

INTRODUCTION

Specifications

- Diameters 3" and 4"
- Maximum internal pressure of 90" water column (22,400 Pascal)
- Made of super ferritic stainless steel

Advantages

- Complete line of stainless steel special gas vent
- No gasket or sealant required for sealing joint
- Largest steel-to-steel connection amongst competition
- Certified for use as a Class IIC and Class IIB vent system
- Tapered male and female ends are precision-formed to connect without requiring sealant
- All fittings and components are TIG welded to ensure a strong, gas-tight weld

Safety

- Refer to installation instructions for proper installation and clearances
- To ensure installation remains completely sealed, the SG ceramic paste and a locking band must be used at each joint connection; only if the installation instructions are followed can a safe, gas-tight installation be assured

Listings

UL-1738 Standard, Venting Systems for Gas-Burning Appliances, Categories II, III and IV. Under this Listing and in a category known as "Special Gas Vents", all variations of Model SGSW have been determined suitable for venting Category II, III and IV gas-fired appliances Listed in accordance with certain ANSI gas appliance standards. In this application Model SGSW is suitable for use at a temperature not exceeding 550°F (288°C) continuously and with a maximum internal pressure of 90 Inch water column (22,400 Pascal).

ULC-S636 (Canadian) Standard for Type BH Gas Venting Systems. Under this (c-UL) Listing and in a category known as "Type BH Vents", all variations of Models SGSW have been determined suitable for venting certain gas fired appliances producing flue gas temperatures not exceeding 245°C (473°F) and positive internal pressures not exceeding 22,400 Pascals (90 Inch water column).

Installation Overview

- Factory built stainless steel venting system for gas-fired appliances listed as Category II, III or IV
- Can be used on high efficiency gas boilers, furnaces, unit heaters, pool heaters, and tankless water heaters
- Always refer to the appliance's instructions to determine proper sizing and connection of the venting system to the appliance
- Always refer to the appliance's instructions to determine limitations with respect to installation and use, such as maximum horizontal length from the appliance, maximum height, joining of two or more parts to constitute the intended assembly, maximum number of offsets in the assembly, and the required installation air space clearances
- Any horizontally installed portion of a venting system shall have a slope (upwards for Category II, III, or IV appliances or downwards for Category III or IV appliances) not less than 1/4" (0.64 mm) every 12" (304.8 mm) to prevent collection of condensate at any location of the assembly; as an option, the installer may also use ECCO Manufacturing™ 87° elbows and fittings that will create a slope of 5/8" (15.9 mm) per every 12" (0.64 mm)
- Unless approved by the appliance manufacturer, only one appliance may be connected to the vent system
- Do not use ECCO Special Gas Vent with any other manufacturer's vent components – it must be used exclusively throughout the system
- Installation must conform to all relevant, local, state/provincial, and national codes
- SG Paste is a ceramic lubricating and assembly paste whose purpose is to help guide the pipe connections to assure the best steel to steel connection and to seal the joint by allowing the ceramic to fill any microscopic steel imperfections – on fittings it will help the installer rotate to the correct position before tapping in place

FIXED PIPE LENGTHS — L

Rigid Pipe Length. Comes with Locking Band.

ITEM #	MODEL #	A (")	B (")	C (")	WT/100 (LBS)	CTN/QTY
613502	SGSW3L06	3	6	3.6	50	20
613504	SGSW3L12	3	12	9.8	110	20
613505	SGSW3L18	3	18	15.6	170	20
613506	SGSW3L24	3	24	21.8	220	20
613507	SGSW3L30	3	30	27.8	280	20
613508	SGSW3L36	3	36	33.8	340	20
613602	SGSW4L06	4	6	3.6	70	12
613604	SGSW4L12	4	12	9.8	150	12
613605	SGSW4L18	4	18	15.6	230	12
613606	SGSW4L24	4	24	21.8	300	12
613607	SGSW4L30	4	30	27.8	380	12
613608	SGSW4L36	4	36	33.8	450	12
613702	SGSW5L06	5	6	3.6	90	7
613704	SGSW5L12	5	12	9.8	190	7
613705	SGSW5L18	5	18	15.8	280	7
613706	SGSW5L24	5	24	21.8	380	7
613707	SGSW5L30	5	30	27.8	470	7
613708	SGSW5L36	5	36	33.8	570	7

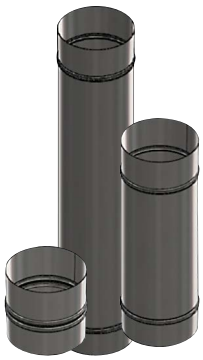

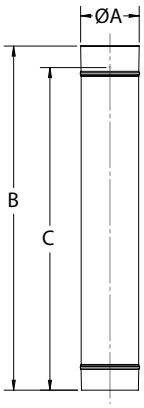

CUT PIPE LENGTHS — LC

Cut Pipe Lengths are specifically engineered to be field cut to desired length. This permits the greatest flexibility for length adjustment in complicated installations. Comes with Locking Band.

Installed Length Range

18" Length: 5.3" – 15.8"

30" Length: 5.3" – 27.8"

ITEM #	MODEL #	A (")	WT/100 (LBS)	CTN/QTY
613512	SGSW3LC18	3	170	20
613514	SGSW3LC30	3	280	20
613612	SGSW4LC18	4	220	12
613614	SGSW4LC30	4	380	12
613712	SGSW5LC18	5	280	7
613714	SGSW5LC30	5	470	7

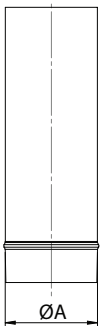

ELBOWS — 87° — E87

Elbows may be used singularly or in combination to provide changes in direction or offsets. Comes with integrated knock plate for installation. Includes a Locking Band.

ITEM #	MODEL #	A (")	WT/100 (LBS)	CTN/QTY
613524	SGSW3E87	3	151	6
613624	SGSW4E87	4	210	10
613724	SGSW5E87	5	273	8

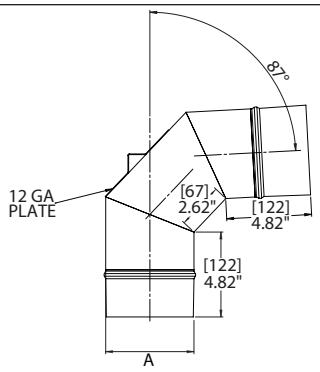

– E.&O.E. – Subject to Change Without Notice – May Not Be Available At All Locations –

ELBOWS — 45° — E45

Elbows may be used singularly or in combination to provide changes in direction or offsets. Comes with integrated knock plate for installation. Includes a Locking Band.

ITEM #	MODEL #	A (")	B (")	WT/100 (LBS)	CTN/QTY
613522	SGSW3E45	3	4.65	139	12
613622	SGSW4E45	4	6.07	202	8
613722	SGSW5E45	5	7.48	273	9

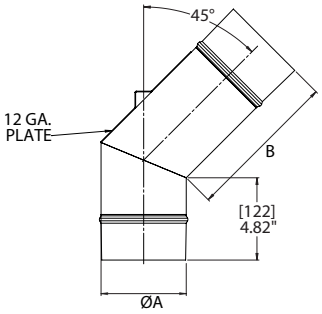

TAPERED ECCENTRIC INCREASERS — EI

Tapered Eccentric Increasers keep the same low point, or are flat on bottom. They also create a slight centerline offset if used in the vertical installation.

ITEM #	MODEL #	A (")	B (")	WT/100 (LBS)	CTN/QTY
613581	SGSW3EI	3	4	140	12

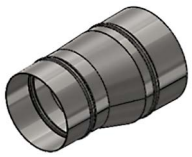

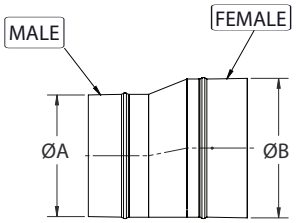

TAPERED ECCENTRIC REDUCERS — ER

Tapered Eccentric Reducers keep the same low point, or are flat on bottom. They also create a slight centerline offset if used in the vertical installation.

ITEM #	MODEL #	A (")	B (")	WT/100 (LBS)	CTN/QTY
613685	SGSW4ER	4	3	140	12
613785	SGSW5ER	5	4	180	5

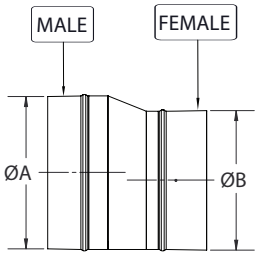

UNIVERSAL DRAIN LENGTHS — LU

Universal Drain Lengths trap all rain water or condensation inside the pipe via an internal dam and routes to an external 1" NPT nipple (See Drain Tube Kit). This works in both horizontal and vertical configurations.

ITEM #	MODEL #	A (")	B (")	C (")	WT/100 (LBS)	CTN/QTY
613516	SGSW3LU	3	2.47	2.5	104	12
613616	SGSW4LU	4	3.47	3	139	8
613716	SGSW5LU	5	4.47	3.5	174	7

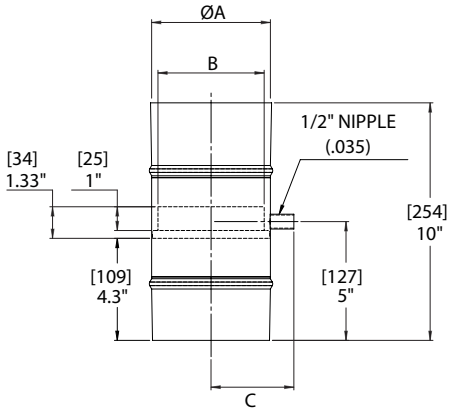

– E.&O.E. – Subject to Change Without Notice – May Not Be Available At All Locations –

DRAIN TUBE KITS — DK

Drain Tube Kits connect to the nipple on Universal Drain Lengths to carry condensate or water to a drain.

Contents

(1) Hose clamp
(1) 5/8" Silicone Tube in 10' length
(2) Cable ties

ITEM #	MODEL #	TUBE LENGTH (FT)	CTN/QTY
613582	SGSWDK	10	*

* Product shipped individually.

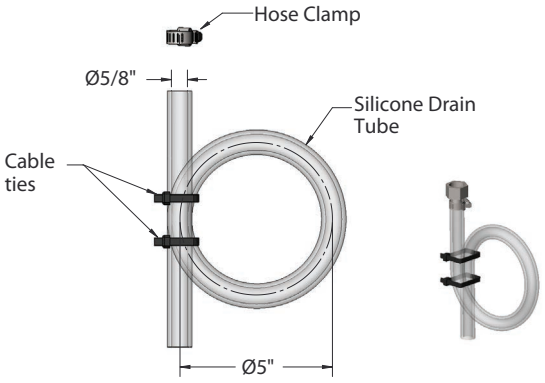

LOCKING BANDS — LB

Locking Bands are required at each joint. Most pipe lengths and fittings include a locking band, but additional locking bands may be required for some components and installations.

ITEM #	MODEL #	A (")	WT/100 (LBS)	CTN/QTY
613555	SGSW3LB	3	40	52
613655	SGSW4LB	4	50	27
613755	SGSW5LB	5	60	6

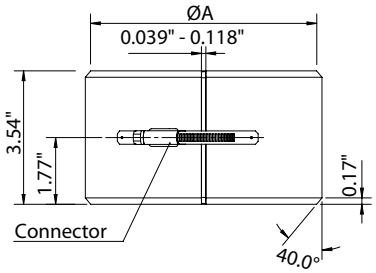

HIGH STRENGTH CLAMPS — C

Heavy Duty Clamps can be used to secure the vent system to appliances or adapters, or when additional strength is required at a connection.

ITEM #	MODEL #	FITS VENT SIZE (")	WT/100 (LBS)	CTN/QTY
613554	SGSW3C	3	32	30
613654	SGSW4C	4	34	14
613754	SGSW5C	5	42	12

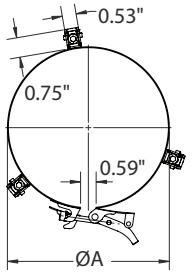

ADAPTERS — UNIVERSAL — AOS

Connect venting to a nominal collar on the outside of the appliance collar. The adapter is split and uses hardware to tighten against the outside of the collar. Use approved sealant for gas tight connection.

ITEM #	MODEL #	A (")	WT/100 (LBS)	CTN/QTY
613547	SGSW3AOS	3	150	15
613647	SGSW4AOS	4	190	9
613747	SGSW5AOS	5	230	6

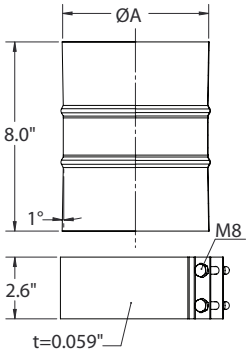

– E.&O.E. – Subject to Change Without Notice – May Not Be Available At All Locations –

ADAPTERS — PVC START — APS

Connect venting to a female PVC collar. Use approved sealant for gas tight connection. If additional clamping is required, a high strength clamp may be used.

ITEM #	MODEL #	A (")	WT/100 (LBS)	CTN/QTY
613580	SGSW3APS	3	53	15
613680	SGSW4APS	4	57	9
613780	SGSW5APS	5	63	6

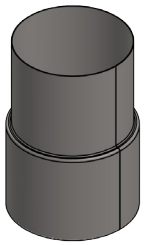

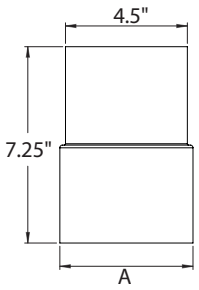

LIGHT SUPPORT BANDS — LSB

Light Support Bands are used to support and guide the venting system in horizontal or vertical installations.

ITEM #	MODEL #	A (")	WT/100 (LBS)	CTN/QTY
613556	SGSW3LSB	3	60	51
613656	SGSW4LSB	4	80	27
613756	SGSW5LSB	5	90	27

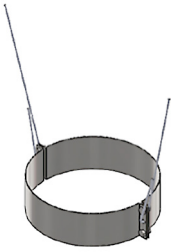

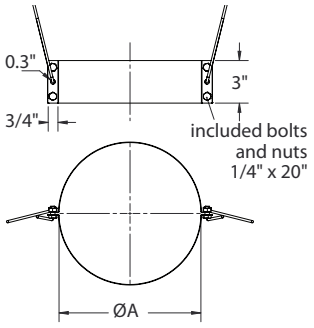

WALL THIMBLES — WT

Wall Thimbles are used to maintain proper clearances when penetrating combustible interior or exterior walls. The telescopic design allows for installation into varying wall thicknesses. Non-combustible wall penetrations do not require a thimble.

ITEM #	MODEL #	A (")	B (")	C (")	WT/100 (LBS)	CTN/QTY
613558	SGSW3WT	3	6	9	100	6
613658	SGSW4WT	4	6	9	90	6
613758	SGSW5WT	5	11	15	80	6

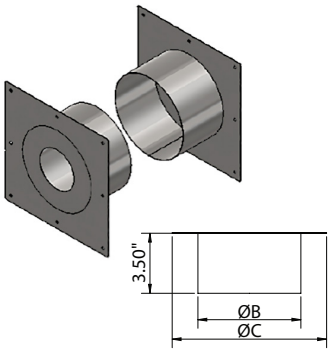

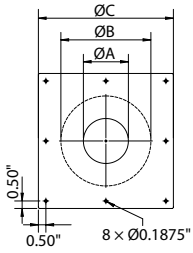

FIRESTOP SPACERS — FS

Firestop Spacers are for use when penetrating a non-fire resistance rated ceiling or floor in installations where a separate fire rated enclosure is not required.

ITEM #	MODEL #	A (")	B (")	WT/100 (LBS)	CTN/QTY
613552	SGSW3FS	3	11	80	5
613652	SGSW4FS	4	12	90	5
613752	SGSW5FS	5	15	140	5

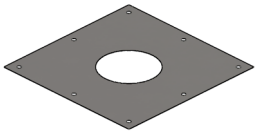

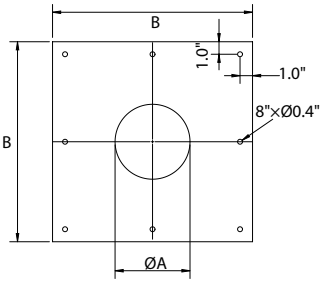

OPEN TERMINATIONS WITH SCREEN — OT

Open Terminations with screen can be used for a horizontal or vertical termination. The screen prevents entry of birds and rodents.

ITEM #	MODEL #	A (")	WT/100 (LBS)	CTN/QTY
613572	SGSW3OT	3	180	42
613672	SGSW4OT	4	240	24
613772	SGWW5OT	5	310	6

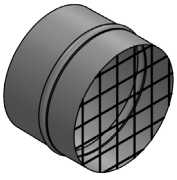

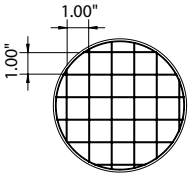

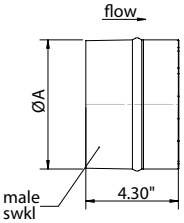

– E.&O.E. – Subject to Change Without Notice – May Not Be Available At All Locations –

TERMINATION ELBOWS WITH SCREEN — ET

Elbow Terminations are used for sidewall terminations or at the end of a vertical stack as specified by certain appliance manufacturers. The screen prevents entry of birds and rodents. Comes with integrated knock plate for installation.

90 Degree

ITEM #	MODEL #	A (")	WT/100 (LBS)	CTN/QTY
613578	SGSW3ET90	3	153	6
613678	SGSW4ET90	4	225	10
613778	SGSW5ET90	5	278	8

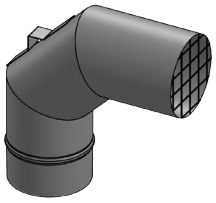

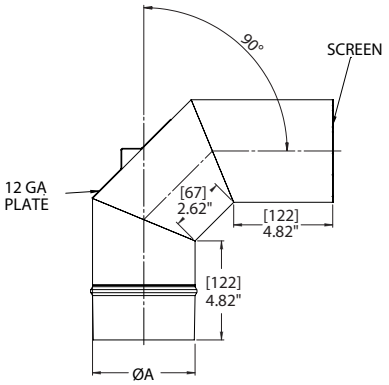

HIGH WIND RAIN CAPS — RCCS

High Wind Rain Caps are premium rain caps, with improved performance in high wind conditions.

ITEM #	MODEL #	A (")	B (")	C (")	D (")	WT/100 (LBS)	CTN/QTY
613570	SGSW3RCCS	3	5.5	2.45	3.5	66	3
613670	SGSW4RCCS	4	6.5	3.45	4.65	93	2
613770	SGSW5RCCS	5	7.5	4.45	5.91	120	3

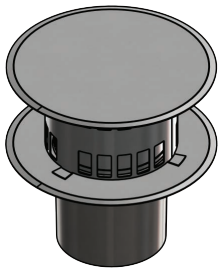

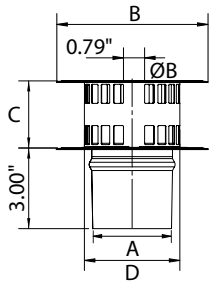

STORM COLLARS — SC

The storm collar is installed above the roof flashing to prevent entry of water. An approved sealant may also be used.

ITEM #	MODEL #	A (")	WT/100 (LBS)	CTN/QTY
613564	SGSW3SC	3	90	12
613664	SGSW4SC	4	100	12
613764	SGSW5SC	5	120	12

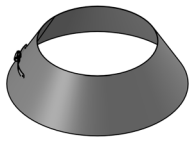

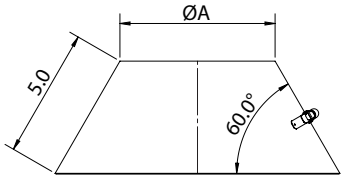

FLAT CONE FLASHINGS — FF

The flat cone flashing is used as a flashing when penetrating a flat to 1/12 roof. The flat cone roof flashing is designed to be installed with a flat cone roof jack and storm collar.

ITEM #	MODEL #	SIZE (")	A (")	B (")	C (")	WT/100 (LBS)	CTN/QTY
613583	SGSW3FF	3	6	21	9	450	6
613683	SGSW4FF	4	7	22	10	490	6
613783	SGSW5FF	5	8	23	11	540	6

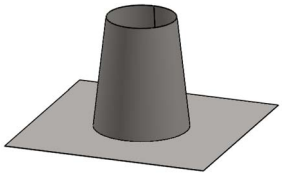

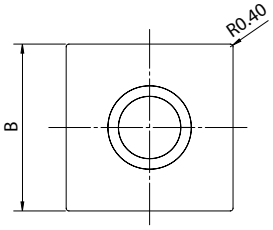

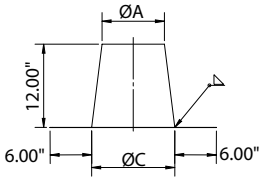

– E.&O.E. – Subject to Change Without Notice – May Not Be Available At All Locations –

VARIABLE PITCHED CONE FLASHINGS — PF

The variable pitched cone flashing is used as a flashing when penetrating a sloped roof up to 7/12 pitch. The variable pitched cone flashing is designed to be installed with a variable pitched cone roof jack and storm collar.

ITEM #	MODEL #	A (")	B (")	C (")	WT/100 (LBS)	CTN/QTY
613584	SGSW3PF	5	5	16	222	6
613684	SGSW4PF	6	5	17	246	6
613784	SGSW5PF	7	5	18	271	6

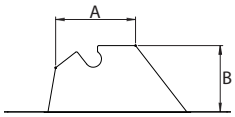

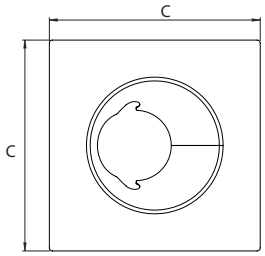

FLAT CONE ROOF JACKS — FRJ

The flat cone roof jack is a heat shield which maintains required clearance to combustibles, and is used in combination with a flat cone roof flashing.

ITEM #	MODEL #	A (")	B (")	WT/100 (LBS)	CTN/QTY
613586	SGSW3FRJ	3	4	363	6
613686	SGSW4FRJ	4	5	408	6
613786	SGSW5FRJ	5	6	453	6

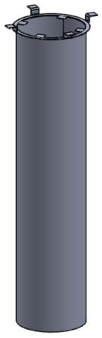

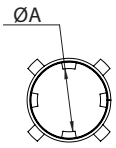

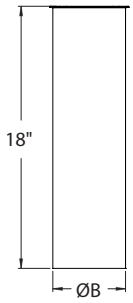

VARIABLE PITCH ROOF JACKS — PRJ

The variable pitch roof jack is a heat shield which maintains required clearance to combustibles, and is used in combination with a variable pitch roof flashing. The design allows it to maintain centerline with the vent pipe as it penetrates the roof line.

ITEM #	MODEL #	A (")	B (")	WT/100 (LBS)	CTN/QTY
613587	SGSW3PRJ	3	4	235	6
613687	SGSW4PRJ	4	5	294	6
613787	SGSW5PRJ	5	6	351	6

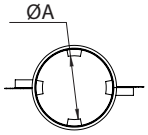

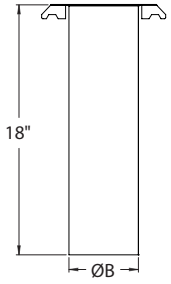

CERAMIC LUBRICANT AND PASTE — SG

ITEM #	MODEL #	SIZE (OZ)	WT/100 (LBS)	CTN/QTY
613500	SG	3.5	22	10

– E.&O.E. – Subject to Change Without Notice – May Not Be Available At All Locations –

NOTES

NOTES

www.eccomfg.com

Langley Distribution
19860 Fraser Highway
Langley, British Columbia
Canada V3A 4C9
Phone: 604-530-4151
Toll Free: 1-877-955-4805
Fax: 604-533-9335

Calgary Distribution
21 – 11150 38th Street, S.E.
Calgary, Alberta
Canada T2C 2Z6
Phone: 403-720-0895
Toll Free: 1-877-955-4815
Fax: 403-720-0897

Kent Distribution
20001 87th Ave. S, Bldg E
Kent, Washington
USA 98031
Phone: 253-872-3721
Toll Free: 1-800-207-6859
Fax: 253-872-3724